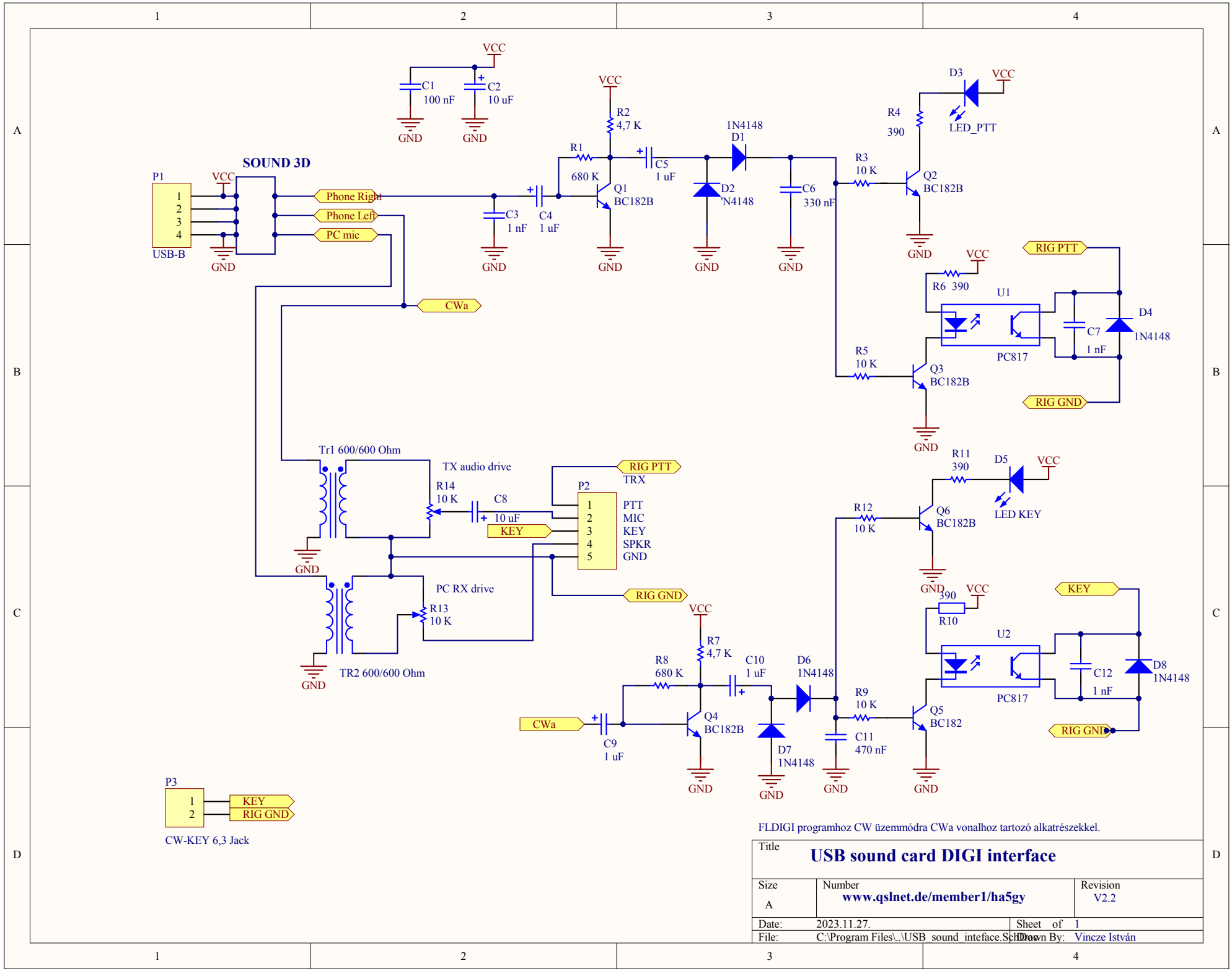
SOUND 3D
P1
USB-B
VCC
GND
Phone Right
Phone Left
PC mic
CWa
C1
100 nF
C2
10 uF
C3
1 nF
C4
1 uF
R1
680 K
R2
4,7 K
Q1
BC182B
C5
1 uF
1N4148
D1
D2
'N4148
C6
330 nF
R3
10 K
R4
390
D3
LED_PTT
Q2
BC182B
R5
10 K
Q3
BC182B
R6 390
U1
PC817
C7
1 nF
D4
1N4148
RIG PTT
RIG GND
Tr1 600/600 Ohm
TX audio drive
R14
10 K
C8
10 uF
KEY
P2
PTT
MIC
KEY
SPKR
GND
TRX
PC RX drive
R13
10 K
TR2 600/600 Ohm
R7
4,7 K
R8
680 K
C10
1 uF
D6
1N4148
C9
1 uF
Q4
BC182B
D7
1N4148
R9
10 K
C11
470 nF
Q5
BC182
R11
390
D5
LED KEY
Q6
BC182B
R12
10 K
R10
390
U2
PC817
C12
1 nF
D8
1N4148
P3
CW-KEY 6,3 Jack
FLDIGI programhoz CW üzemmódra CWa vonalhoz tartozó alkatrészekkel.
Title
USB sound card DIGI interface
Size
A
Number
www.qslnet.de/member1/ha5gy
Revision
V2.2
Date: 2023.11.27.
Sheet of 1
File: C:\Program Files\..\USB_sound_inteface.SchDoc
Drawn By: Vincze István